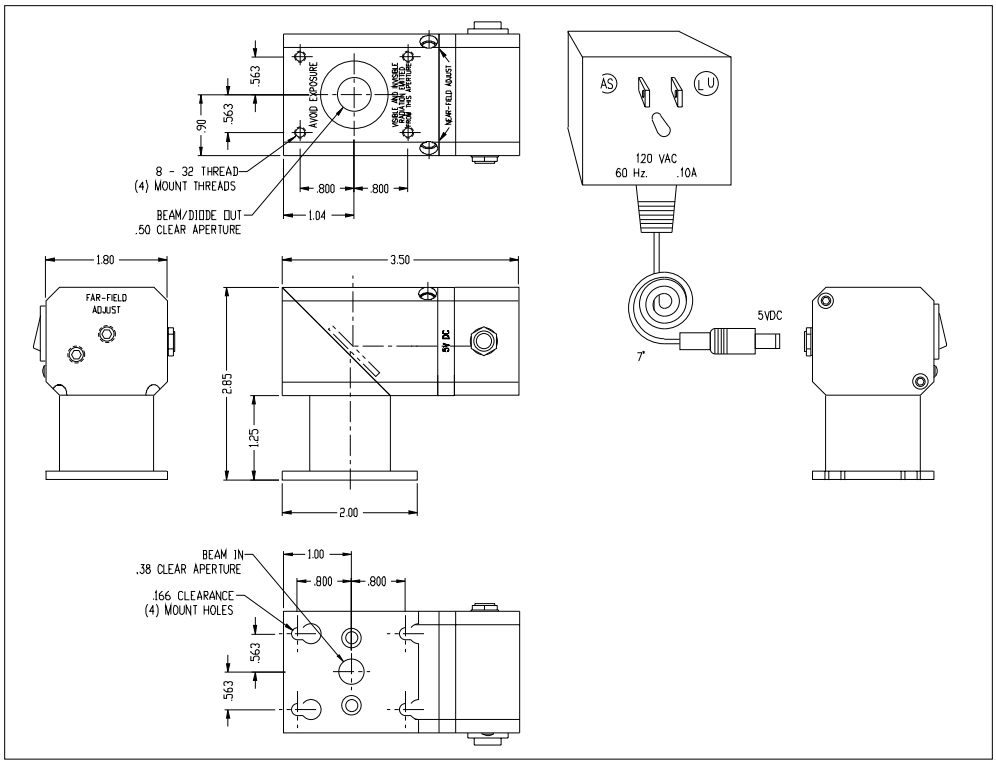
.563
.563
.90
AVOID EXPOSURE
VISIBLE AND INVISIBLE
REDIATION EMITTED
FROM THIS APERTURE
NEAR-FIELD ADJUST
8 - 32 THREAD
(4) MOUNT THREADS
BEAM/DIODE OUT
.50 CLEAR APERTURE
.800
.800
1.04
AS
LU
120 VAC
60 Hz.
.10A
5VDC
7'
1.80
FAR-FIELD
ADJUST
3.50
5V DC
2.85
1.25
2.00
BEAM IN
.38 CLEAR APERTURE
.166 CLEARANCE
(4) MOUNT HOLES
1.00
.800
.800
.563
.563